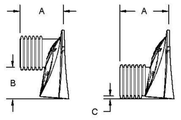

PRE-FAB STUBS AT BOTTOM OF END CAP FOR PART NUMBERS ENDING WITH "B"
PRE-FAB STUBS AT TOP OF END CAP FOR PART NUMBERS ENDING WITH "T"
PRE-CORED END CAPS END WITH "PC"

PART #	STUB	A	B	C
SC740EPE06T / SC740EPE06TPC	6" (150 mm)	10.9" (277 mm)	18.5" (470 mm)	---
SC740EPE06B / SC740EPE06BPC			---	0.5" (13 mm)
SC740EPE08T /SC740EPE08TPC	8" (200 mm)	12.2" (310 mm)	16.5" (419 mm)	---
SC740EPE08B / SC740EPE08BPC			---	0.6" (15 mm)
SC740EPE10T / SC740EPE10TPC	10" (250 mm)	13.4" (340 mm)	14.5" (368 mm)	---
SC740EPE10B / SC740EPE10BPC			---	0.7" (18 mm)
SC740EPE12T / SC740EPE12TPC	12" (300 mm)	14.7" (373 mm)	12.5" (318 mm)	---
SC740EPE12B / SC740EPE12BPC			---	1.2" (30 mm)
SC740EPE15T / SC740EPE15TPC	15" (375 mm)	18.4" (467 mm)	9.0" (229 mm)	---
SC740EPE15B / SC740EPE15BPC			---	1.3" (33 mm)
SC740EPE18T / SC740EPE18TPC	18" (450 mm)	19.7" (500 mm)	5.0" (127 mm)	---
SC740EPE18B / SC740EPE18BPC			---	1.6" (41 mm)
SC740EPE24B*	24" (600 mm)	18.5" (470 mm)	---	0.1" (3 mm)

ALL STUBS, EXCEPT FOR THE SC740EPE24B ARE PLACED AT BOTTOM OF END CAP SUCH THAT THE OUTSIDE DIAMETER OF THE STUB IS FLUSH WITH THE BOTTOM OF THE END CAP. FOR ADDITIONAL INFORMATION CONTACT STORMTECH AT 1-888-892-2694.

* FOR THE SC740EPE24B THE 24" (600 mm) STUB LIES BELOW THE BOTTOM OF THE END CAP APPROXIMATELY 1.75" (44 mm). BACKFILL MATERIAL SHOULD BE REMOVED FROM BELOW THE N-12 STUB SO THAT THE FITTING SITS LEVEL.

NOTE: ALL DIMENSIONS ARE NOMINAL

STORMTECH SC-740 STUD LOCATION IN END CAPS
NOT TO SCALE

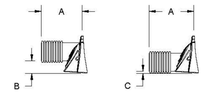

STUBS AT BOTTOM OF END CAP FOR PART NUMBERS ENDING WITH "B"
STUBS AT TOP OF END CAP FOR PART NUMBERS ENDING WITH "T"

PART #	STUB	A	B	C
SC310EPE06T / SC310EPE06TPC	6" (150 mm)	9.6" (244 mm)	5.8" (147 mm)	---
SC310EPE06B / SC310EPE06BPC			---	0.5" (13 mm)
SC310EPE08T / SC310EPE08TPC	8" (200 mm)	11.9" (302 mm)	---	
SC310EPE08B / SC310EPE08BPC			3.5" (89 mm)	0.6" (15 mm)
SC310EPE10T / SC310EPE10TPC	10" (250 mm)	12.7" (323 mm)	1.4" (36 mm)	---
SC310EPE10B / SC310EPE10BPC			---	0.7" (18 mm)
SC310EPE12B	12" (300 mm)	13.5" (343 mm)	---	0.9" (23 mm)

ALL STUBS, EXCEPT FOR THE SC310EPE12B ARE PLACED AT BOTTOM OF END CAP SUCH THAT THE OUTSIDE DIAMETER OF THE STUB IS FLUSH WITH THE BOTTOM OF THE END CAP. FOR ADDITIONAL INFORMATION CONTACT STORMTECH AT 1-888-892-2694.

* FOR THE SC310EPE12B THE 12" (300 mm) STUB LIES BELOW THE BOTTOM OF THE END CAP APPROXIMATELY 0.25" (6 mm). BACKFILL MATERIAL SHOULD BE REMOVED FROM BELOW THE N-12 STUB SO THAT THE FITTING SITS LEVEL.

NOTE: ALL DIMENSIONS ARE NOMINAL

STORMTECH SC-310 STUD LOCATION IN END CAPS
NOT TO SCALE

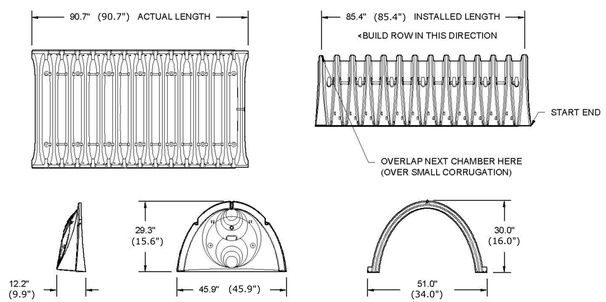

NOMINAL CHAMBER SPECIFICATIONS

SIZE (W X H X INSTALLED LENGTH)	51.0" X 30.0" X 85.4"	(34.0"x16.0"x85.4")
CHAMBER STORAGE	45.9 CUBIC FEET	(14.7 FT^3)
MINIMUM INSTALLED STORAGE*	74.9 CUBIC FEET	(31.0 FT^3)
WEIGHT	75.0 lbs.	(75.0 LBS.)

*ASSUMES 6" (152 mm) STONE ABOVE, BELOW, AND BETWEEN CHAMBERS

NOTE: DIMENSIONS ARE STORMTECH SC-740 WITH SC-310 SHOWN IN PARENTHESIS.

STORMTECH SC-740 & SC-310 TECHNICAL SPECIFICATION
NOT TO SCALE

UNDERGROUND DETENTION/INFILTRATION ELEVATION SUMMARY TABLE

STRUCTURE ID	CHAMBER TYPE	NUMBER OF CHAMBERS	TOP OF STONE ELEV.	TOP OF CHAMBER ELEV.	BOTTOM OF CHAMBER ELEV.	BOTTOM OF STONE ELEV.	INLET MANIFOLD SIZE	OUTLET MANIFOLD SIZE	INLET STUB INVERT ELEV.	OUTLET STUB INVERT ELEV.
UNDERGROUND DETENTION/ INFILTRATION SYSTEM #1	SC-740	99 (IN 9 ROWS)	76.5	76.0	73.5	73.0	15"X12"	15"X12"	73.6(12"Ø)	73.6(12"Ø)
UNDERGROUND DETENTION/ INFILTRATION SYSTEM #2	SC-740	234 (IN 18 ROWS)	76.0	75.5	73.0	72.5	24"X12"	24"X12"	73.10(12"Ø)	73.10(12"Ø)
UNDERGROUND DETENTION/ INFILTRATION SYSTEM #3	SC-310	170 (IN 17 ROWS)	72.83	72.33	71.0	70.5	15"X12"	15"X12"	71.08(12"Ø)	71.08(12"Ø)

UNDERGROUND DETENTION/INFILTRATION ELEVATION SUMMARY TABLE
NOT TO SCALE

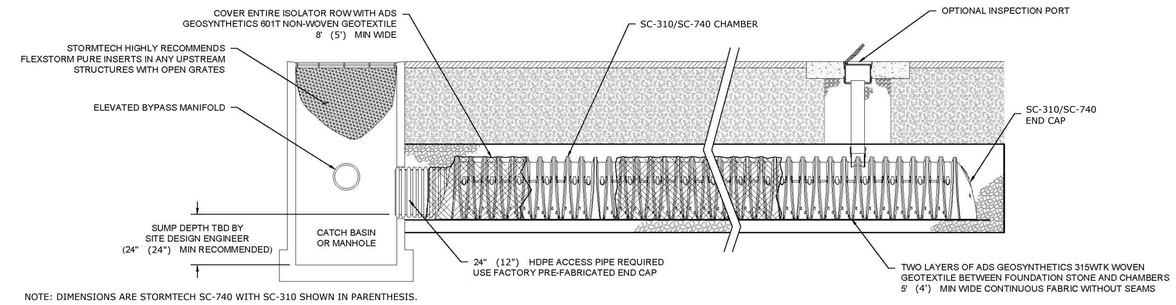

NOTE: DIMENSIONS ARE STORMTECH SC-740 WITH SC-310 SHOWN IN PARENTHESIS.

STORMTECH SC-740 & SC-310 ISOLATOR ROW DETAIL
NOT TO SCALE

ACCEPTABLE FILL MATERIALS: STORMTECH SC-740 CHAMBER SYSTEMS

MATERIAL LOCATION		DESCRIPTION	AASHTO MATERIAL CLASSIFICATIONS	COMPACTION / DENSITY REQUIREMENT
D	**FINAL FILL:** FILL MATERIAL FOR LAYER 'D' STARTS FROM THE TOP OF THE 'C' LAYER TO THE BOTTOM OF FLEXIBLE PAVEMENT OR UNPAVED FINISHED GRADE ABOVE. NOTE THAT PAVEMENT SUBBASE MAY BE PART OF THE 'D' LAYER.	ANY SOIL/ROCK MATERIALS, NATIVE SOILS, OR PER ENGINEER'S PLANS. CHECK PLANS FOR PAVEMENT SUBGRADE REQUIREMENTS.	N/A	PREPARE PER SITE DESIGN ENGINEER'S PLANS. PAVED INSTALLATIONS MAY HAVE STRINGENT MATERIAL AND PREPARATION REQUIREMENTS.
C	**INITIAL FILL:** FILL MATERIAL FOR LAYER 'C' STARTS FROM THE TOP OF THE EMBEDMENT STONE ('B' LAYER) TO 18" (450 mm) ABOVE THE TOP OF THE CHAMBER. NOTE THAT PAVEMENT SUBBASE MAY BE A PART OF THE 'C' LAYER.	GRANULAR WELL-GRADED SOIL/AGGREGATE MIXTURES, <35% FINES OR PROCESSED AGGREGATE. MOST PAVEMENT SUBBASE MATERIALS CAN BE USED IN LIEU OF THIS LAYER.	AASHTO M145[1] A-1, A-2-4, A-3 OR AASHTO M43[1] 3, 357, 4, 467, 5, 56, 57, 6, 67, 68, 7, 78, 8, 89, 9, 10	BEGIN COMPACTIONS AFTER 12" (300 mm) OF MATERIAL OVER THE CHAMBERS IS REACHED. COMPACT ADDITIONAL LAYERS IN 6" (150 mm) MAX LIFTS TO A MIN. 95% PROCTOR DENSITY FOR WELL GRADED MATERIAL AND 95% RELATIVE DENSITY FOR PROCESSED AGGREGATE MATERIALS. ROLLER GROSS VEHICLE WEIGHT NOT TO EXCEED 12,000 lbs (53 kN). DYNAMIC FORCE NOT TO EXCEED 20,000 lbs (89 kN).
B	**EMBEDMENT STONE:** FILL SURROUNDING THE CHAMBERS FROM THE FOUNDATION STONE ('A' LAYER) TO THE 'C' LAYER ABOVE.	CLEAN, CRUSHED, ANGULAR STONE	AASHTO M43[1] 3, 357, 4, 467, 5, 56, 57	NO COMPACTION REQUIRED.
A	**FOUNDATION STONE:** FILL BELOW CHAMBERS FROM THE SUBGRADE UP TO THE FOOT (BOTTOM) OF THE CHAMBER.	CLEAN, CRUSHED, ANGULAR STONE	AASHTO M43[1] 3, 357, 4, 467, 5, 56, 57	PLATE COMPACT OR ROLL TO ACHIEVE A FLAT SURFACE.[2,3]

PLEASE NOTE:
1. THE LISTED AASHTO DESIGNATIONS ARE FOR GRADATIONS ONLY. THE STONE MUST ALSO BE CLEAN, CRUSHED, ANGULAR. FOR EXAMPLE, A SPECIFICATION FOR #4 STONE WOULD STATE; "CLEAN, CRUSHED, ANGULAR NO. 4 (AASHTO M43) STONE".
2. STORMTECH COMPACTION REQUIREMENTS ARE MET FOR 'A' LOCATION MATERIALS WHEN PLACED AND COMPACTED IN 6" (150 mm) (MAX) LIFTS USING TWO FULL COVERAGES WITH A VIBRATORY COMPACTOR.
3. WHERE INFILTRATION SURFACES MAY BE COMPROMISED BY COMPACTION, FOR STANDARD DESIGN LOAD CONDITIONS, A FLAT SURFACE MAY BE ACHIEVED BY RAKING OR DRAGGING WITHOUT COMPACTION EQUIPMENT. FOR SPECIAL LOAD DESIGNS, CONTACT STORMTECH FOR COMPACTION REQUIREMENTS.
4. ONCE LAYER 'C' IS PLACED, ANY SOIL/MATERIAL CAN BE PLACED IN LAYER 'D' UP TO THE FINISHED GRADE. MOST PAVEMENT SUBBASE SOILS CAN BE USED TO REPLACE THE MATERIAL REQUIREMENTS OF LAYER 'C' OR 'D' AT THE SITE DESIGN ENGINEER'S DISCRETION.

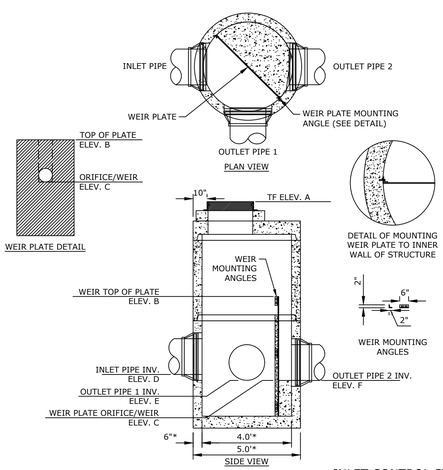

NOTE:
*5' OR 6' DIA. PRECAST BASES MAY BE USED WHEN REQUIRED DUE TO SIZE OR NUMBER OF PIPES AT THE MANHOLE. PRECAST REDUCERS WILL BE PLACED ABOVE THE 5' AND 6' BASES. WALL THICKNESS TO INCREASE 1" FOR EACH 1' OF INSIDE DIAMETER INCREASE.

NOTES:
1. STEEL REINFORCEMENT SHALL CONFORMS TO LATEST ASTM SPECIFICATIONS: ASTM A-615, GRADE 60 BLACK DEFORMED BARS ASTM A-185 WELDED WIRE FABRIC 0.12 SQ. IN./LINEAL FT. AND 0.12 SQ. IN. (BOTH WAYS) BASE BOTTOM
2. CONCRETE: Fc = 4,000 PSI @ 28 DAYS MINIMUM, TYPE III CEMENT
3. BUTYL RUBBER JOINT SEALANT PROVIDED CONFORMS TO ASTM C-990 AND FEDERAL SPEC SS-S-210A
4. ONE POUR MONOLITHIC BASE SECTION.

OVERFLOW CONTROL STRUCTURE ELEVATION SUMMARY TABLE

STRUCTURE ID	TOP OF FRAME ELEV. A	TOP OF WEIR PLATE ELEV. B	LOW-FLOW ORIFICE/WEIR INVERT ELEV. C	INLET PIPE INVERT ELEV. D	OUTLET PIPE 1 INVERT ELEV. E	OUTLET PIPE 2 INVERT ELEV. F
ICS1	78.3	74.75	-	74.70 (18"Ø)	73.5 (24"Ø; ISOLATER ROW)	73.5 (15"Ø; INLET MANIFOLD)
ICS2	80.3	74.75	-	76.15 (12"Ø)	73.5 (24"Ø; ISOLATER ROW)	73.5 (15"Ø; INLET MANIFOLD)
ICS3	78.0	74.25	-	73.65 (18"Ø)	73.0 (24"Ø; ISOLATER ROW)	73.0 (24"Ø; INLET MANIFOLD)
ICS4	81.7	74.25	-	73.0 (24"Ø)	73.0 (24"Ø; ISOLATER ROW)	73.0 (24"Ø; INLET MANIFOLD)
ICS5	77.5	73.25	-	71.90 (15"Ø)	71.08 (12"Ø; ISOLATER ROW)	71.0 (15"Ø; INLET MANIFOLD)
ICS6	77.2	73.25	-	72.40 (15"Ø)	71.08 (12"Ø; ISOLATER ROW)	71.0 (15"Ø; INLET MANIFOLD)
OCS1	80.1	76.0	74.75 (4"Ø ORIFICE) 73.75 (4"Ø ORIFICE)	73.50(15"Ø; N) 73.60(12"Ø; E)	-	73.5 (12"Ø)
OCS2	79.6	75.5	73.0 (8"Ø ORIFICE)	73.0(24"Ø)	-	73.0 (15"Ø)
OCS4	78.45	-	-	71.0(15"Ø; E & W) 71.08(12"Ø; S)	-	71.1 (18"Ø)

INLET CONTROL STRUCTURE (ICS) AND OUTLET CONTROL STRUCTURE (OCS)
NOT TO SCALE

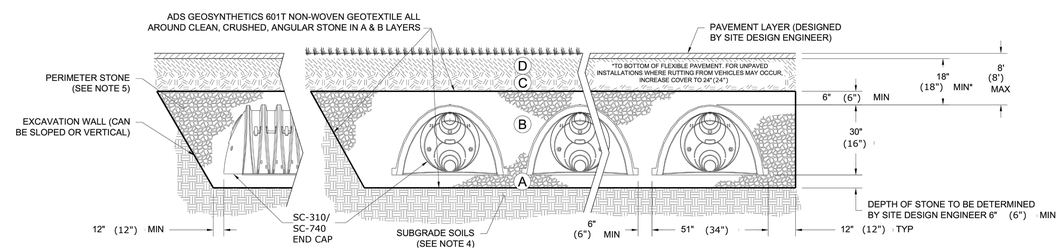

NOTES:

1. CHAMBERS SHALL MEET THE REQUIREMENTS OF ASTM F2418-16a, "STANDARD SPECIFICATION FOR POLYPROPYLENE (PP) CORRUGATED WALL STORMWATER COLLECTION CHAMBERS".
2. SC-740/310 CHAMBERS SHALL BE DESIGNED IN ACCORDANCE WITH ASTM F2787 "STANDARD PRACTICE FOR STRUCTURAL DESIGN OF THERMOPLASTIC CORRUGATED WALL STORMWATER COLLECTION CHAMBERS".
3. THE SITE DESIGN ENGINEER IS RESPONSIBLE FOR ASSESSING THE BEARING RESISTANCE (ALLOWABLE BEARING CAPACITY) OF THE SUBGRADE SOILS AND THE DEPTH OF FOUNDATION STONE WITH CONSIDERATION FOR THE RANGE OF EXPECTED SOIL MOISTURE CONDITIONS.
4. PERIMETER STONE MUST BE EXTENDED HORIZONTALLY TO THE EXCAVATION WALL FOR BOTH VERTICAL AND SLOPED EXCAVATION WALLS.
5. REQUIREMENTS FOR HANDLING AND INSTALLATION:
   - TO MAINTAIN THE WIDTH OF CHAMBERS DURING SHIPPING AND HANDLING, CHAMBERS SHALL HAVE INTEGRAL, INTERLOCKING STACKING LUGS.
   - TO ENSURE A SECURE JOINT DURING INSTALLATION AND BACKFILL, THE HEIGHT OF THE CHAMBER JOINT SHALL NOT BE LESS THAN 2".
   - TO ENSURE THE INTEGRITY OF THE ARCH SHAPE DURING INSTALLATION, a) THE ARCH STIFFNESS CONSTANT AS DEFINED IN SECTION 6.2.8 OF ASTM F2418 SHALL BE GREATER THAN OR EQUAL TO 550* LBS/IN/IN. AND b) TO RESIST CHAMBER DEFORMATION DURING INSTALLATION AT ELEVATED TEMPERATURES (ABOVE 73° F / 23° C), CHAMBERS SHALL BE PRODUCED FROM REFLECTIVE GOLD OR YELLOW COLORS.

*ARCH STIFFNESS CONSTANT SHALL BE GREATER THAN OR EQUAL TO 550 LBS/IN/IN. FOR SC-740 CHAMBERS AND 400 LBS/IN/IN. FOR SC-310 CHAMBERS.

ACCEPTABLE FILL MATERIALS: STORMTECH SC-740 & SC-310 CHAMBER SYSTEMS
NOT TO SCALE

REV.	DESCRIPTION OF REVISION	DATE	APPR.
1	IWC AND PZC SUBMISSION	11/15/2021	SMM

STAMP

Loureiro
Engineering Associates • Surveyors • Scientists • Engineers
Waste • Facility Services • Laboratory
Loureiro Engineering Associates, Inc.
100 Crystal A Drive, Hartford, CT 06106-1049
Phone: 860-448-4200 • Fax: 860-448-9999
An Employee Owned Company • www.Loureiro.com

©Loureiro Engineering Associates, Inc.
All rights reserved 2020

SCALE: NOT TO SCALE
COMM. NO.: 89VA9.01
DATE: 3/11/2021
DRAWN BY: BJM
DATE: 3/11/2021
APPROVED BY: PB

DETAILS

VILLAGE APARTMENTS - PHASE III

15 JEROME AVENUE, 82 JEROME ROAD AND 232 ROUTE 32, UNCASVILLE - MONTVILLE, CT
PREPARED FOR:
VILLAGE APARTMENTS LLC AND CONNECTICUT MULTIFAMILY EQUITIES II, LLC
C/O NORTHWOOD ASSET MANAGEMENT, 1 GARDEN STREET, WHITE PLAINS, NY

DRAWING: 19000079.13
SHEET NO. 12 NO. OF SHEETS 13

N:\CT\MONTVILLE\JEROME RD\DWGS\DETAILS.DWG Tab: DETAILS -8.5X11 PAGESETUP:NONE PLOTTED BY:PAUL BOUCHARD 11/15/2021 8:15 AM

GENERAL NOTES PLANTING:

1. THE CONTRACTOR IS RESPONSIBLE FOR NOTIFYING OWNER REPRESENTATIVE OF ANY AND ALL CONCERNS REGARDING PLANT HEALTH RELATIVE TO SITE CONDITIONS. NOTIFY THE OWNER REPRESENTATIVE SHOULD UNSATISFACTORY BORROW OR NATIVE SOIL CONDITIONS BE OBSERVED.
2. AS CONSTRUCTION PROCEEDS, FINE GRADE AND INSTALL SURFACING MATERIAL AS SOON AS POSSIBLE TO REDUCE EROSION.
3. ALL DISTURBED AREAS NOT COVERED BY BUILDING, PAVING, PLANTING BEDS OR OTHER IMPROVEMENTS SHALL BE GRADED, TOPSOILED TO A DEPTH OF 6" AND SEEDED.
4. PLANT BEDS SHALL BE FURNISHED WITH NON-COMPACTED PLANTING SOIL TO A DEPTH OF 12" TO MEET FINISHED GRADES AS INDICATED ON GRADING PLAN. INSTALL PLANT MATERIAL AND MULCH IN A TIMELY MANNER.
5. IN ALL PLANT BEDS, PROVIDE PINE BARK MULCH AS DETAILED. ESTABLISH A NEAT, SMOOTH EDGE BETWEEN MULCH AND LAWN.
6. ADJUSTMENTS IN THE LOCATIONS OF PLANT MATERIALS MAY BE NECESSARY DUE TO LOCATIONS OF UTILITIES. ADJUSTMENTS SHALL BE APPROVED BY THE OWNER'S REPRESENTATIVE PRIOR TO INSTALLATION.
7. PROVIDE AND INSTALL ALL PLANTS SHOWN ON THE PLANTING PLAN DRAWINGS; THE QUANTITIES IN THE PLANT LIST ARE PROVIDED FOR THE CONTRACTOR'S CONVENIENCE ONLY. IF DISCREPANCIES OCCUR, THE DRAWING SYMBOLS PREVAIL OVER THE PLANT LIST QUANTITIES.

NOTE: TREES AND SHRUBS SHALL BE PLANTED WITH THE BASE OF THE BOLE 2" TO 3" ABOVE FINISHED GRADE TO ALLOW FOR SETTLEMENT.

Planting Detail – Typ.
Not to Scale

PLANT LIST

CODE:	QTY:	BOTANICAL NAME:	COMMON NAME:	SIZE:	ROOT / COMMENT:
DECIDUOUS TREES:					
AC	--	AMELANCHIER CANADENSIS	SERVICEBERRY	10' HT MIN	
AS	--	ACER SACCHARUM	SUGAR MAPLE	2.5" CAL	
AR	--	ACER RUBRUM	RED MAPLE	2" CAL	
BND	--	BETULA NIGRA 'DURA HEAT'	DURA HEAT BIRCH	10' HT MIN	
CF	--	CORNUS FLORIDA 'CLOUD NINE'	CLOUD NINE FLOWERING DOGWOOD	1.5" CAL	
CK	--	CLADRASTIS KENTUKEA	AMERICAN YELLOWWOOD	2" CAL	
CO	--	CARYA OVATA	SHAGBARK HICKORY	2" CAL	
CoK	--	CORNUS KOUSA	KOUSA DOGWOOD	1.5" CAL	
GT	--	GLEDITSIA TRIACANTHOS STREETKEEPER	STREETKEEPER HONEYLOCUST	2" CAL	
MS	--	MAGNOLIA SOULANGEANA	SAUCER MAGNOLIA	12' HT MIN	B&B
MV	--	MAGNOLIA VIRGINIANA	SWEET BAY MAGNOLIA	12' HT MIN	
NS	--	NYSSA SYLVATICA	BLACK TUPELO	2" CAL	
OA	--	OXYDENDRON ARBOREUM	SOURWOOD	1.5" CAL	
PO	--	PLATANUS OCCIDENTALIS	AMERICAN SYCAMORE	2" CAL	
TA	--	TILIA AMERICANA	BASSWOOD	2" CAL	
TC	--	TILIA CORDATA	LITTLE LEAF LINDEN	2" CAL	
UAP	--	ULMUS AMERICANA 'PRINCETON'	PRINCETON ELM	2" CAL.	
PC	--	PRUNUS CERASIFERA	PURPLE LEAF PLUM	1.5" CAL	
QP	--	QUERCUS PALUSTRIS	PIN OAK	2" CAL	
QR	--	QUERCUS RUBRA	NORTHERN RED OAK	2" CAL	
EVERGREEN TREES:					
ABC	--	ABIES CONCOLOR	WHITE FIR	10' HT MIN	B&B SINGLE LEADER
ABF	--	ABIES FRASERI	FRASER FIR	8' HT MIN	B&B SINGLE LEADER
IO	--	ILEX OPACA	AMERICAN HOLLY	8' HT MIN	B&B SINGLE LEADER
PA	--	PICEA ABIES	NORWAY SPRUCE	10' HT MIN	B&B SINGLE LEADER
PS	--	PINUS STROBUS	WHITE PINE	10' HT MIN	B&B SINGLE LEADER
SV	--	SCIADOPITYS VERTICILLATA	JAPANESE UMBRELLA PINE	8' HT MIN	B&B SINGLE LEADER
TsC	--	TSUGA CANADENSIS	EASTERN HEMLOCK	10' HT MIN	B&B SINGLE LEADER
DECIDUOUS SHRUBS:					
AsP	--	AESCULUS PARVIFLORA	BOTTLEBRUSH BUCKEYE	4' HT MIN	B&B
CS	--	CORNUS SERICEA	RED OSIER DOGWOOD	4' HT MIN	B&B
HS	--	HIBISCUS SYRIACUS	ROSE OF SHARON	5' HT MIN	
RC	--	ROSA 'CARPET'	CARPET ROSE	#2	CONT
RKO	--	ROSA 'KNOCK OUT'	KNOCK OUT ROSE	#3	CONT
RM	--	RHODO. MAXIMUM	ROSEBAY RHODODENDRON	4' HT MIN	B&B
VBM	--	VIBURNUM x BURKWOODII	MOHAWK VIBURNUM	3' HT MIN	B&B
VTJ	--	VIBURNUM x JUDDII	JUDDII VIBURNUM	4' HT MIN	B&B
VTM	--	VIBURNUM P.T. MARJESII	MARJES DOUBLEFILE VIBURNUM	3' HT MIN	B&B
EVERGREEN SHRUBS:					
IxM	--	ILEX x MES. 'CHINA GIRL'	CHINA GIRL HOLLY	4' HT MIN	B&B
IG	--	ILEX GLABRA	INKBERRY HOLLY	3' HT MIN	B&B
MD	--	MICROBIOTA DESCUSSATA	RUSSIAN ARBORVITAE	#5	CONT
MP	--	MYRICA PENSYLVANICA	NORTHERN BAYBERRY	3' HT MIN	B&B
JCP	--	JUNIPERUS CH. 'BLUE POINT'	BLUE POINT JUNIPER	4' HT MIN	B&B
JHB	--	JUNIPERUS H. 'BLUE CHIP'	BLUE CHIP JUNIPER	#5	CONT
JSW	--	JUIPERUS S. 'WICHITA BLUE'	WICHITA BLUE JUNIPER	4' HT MIN	B&B
JVO	--	JUNIPERUS V. 'GREY OWL'	GREY OWL JUNIPER	3' HT. MIN.	B&B
RHC	--	RHODO. YAK. 'CRETE'	CRETE YAKUSHIMANUM RHODODENDRON	#5	CONT
RHJ	--	RHODODENDRON PJM	MIXED PJM RHODODENDRON	#5	CONT
TOD	--	THUJA O. 'DEGROOT'S SPIRE'	DEGROOT'S SPIRE ARBORVITAE	6' HT MIN	B&B
TON	--	THUJA O. 'NIGRA'	DARK AMERICAN ARBORVITAE	10' HT MIN	B&B
TOS	--	THUJA O. 'SMARAGD'	EMERALD GREEN ARBORVITAE	8' HT MIN	B&B
PERENNIALS:					
MSG	--	MISCANTHUS SINENSIS MIX	MIXED MAIDEN GRASS VARIETIES	#3	CONT
PAN	--	PANICUM VIRGATUM MIX	MIXED SWITCHGRASS VARIETIES	#3	CONT
PEN	--	PENNISETUM ALOPECUROIDES MIX	MIXED FOUNTAIN GRASS VARIETIES	#3	CONT
VM	--	VINCA MINOR	VINCA GROUNDCOVER	SP4	CONT
PERENNIAL ALLOWANCE:					
TBD	30	ORNAMENTAL GRASSES - MIXED VARIETIES TO BE FIELD LOCATED		#3	CONT

NOTES:
PLANTS TO BE APPROVED BY OWNER/OWNER REPRESENTATIVE PRIOR TO PURCHASE & TRANSPORT TO SITE FOR INSTALLATION.

REV.	DESCRIPTION OF REVISION	DATE	APPR.
1	IWC AND PZC SUBMISSION	11/15/2021	SMM

STAMP

CRA AT Loureiro STUDIO
LANDSCAPE ARCHITECTURE • SITE PLANNING
100 Northwest Drive • Plainville, Connecticut 06062
Phone: (860) 747-7179 • Fax: (860) 747-1020
An Employee Owned Company • www.loureiro.com
©Loureiro Engineering Associates, Inc.
All rights reserved 2021

SCALE 1" = 40'
COMM. NO. 88VA9.01
DRAWN BY CVR/HWW
DATE 2/8/21
APPROVED BY
DATE

SITE PLANTING PLAN

VILLAGE APARTMENTS - PHASE III

15 JEROME AVENUE, 82 JEROME ROAD AND 232 ROUTE 32, UNCASVILLE - MONTVILLE, CT
PREPARED FOR:

VILLAGE APARTMENTS LLC AND CONNECTICUT MULTIFAMILY EQUITIES II, LLC

DRAWING 19000079.14
SHEET NO. 13 NO. OF SHEETS 13

V:\CT\MONTVILLE\JEROME RD-0232&5 TRACE III\DWGS\SITE PLANNING\DWG 13b - SITE PLANTING PLAN.DWG, 11/15/2021 10:47 AM, Brian Lindquist, 1:1